71954-00001.A

i

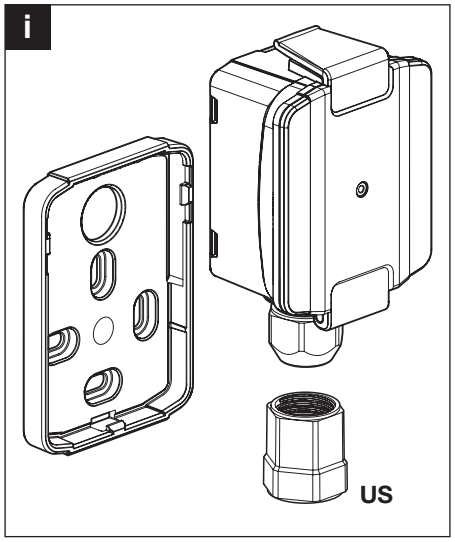

1

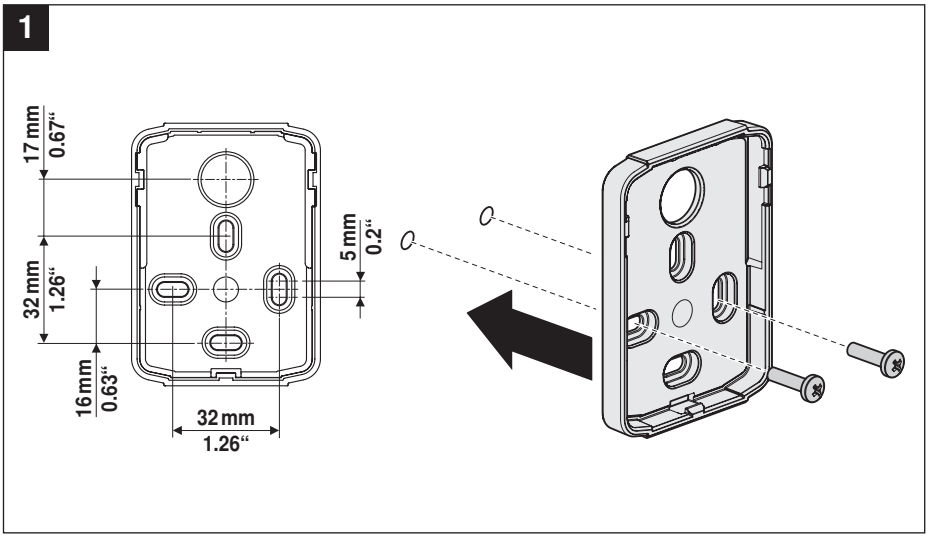

2

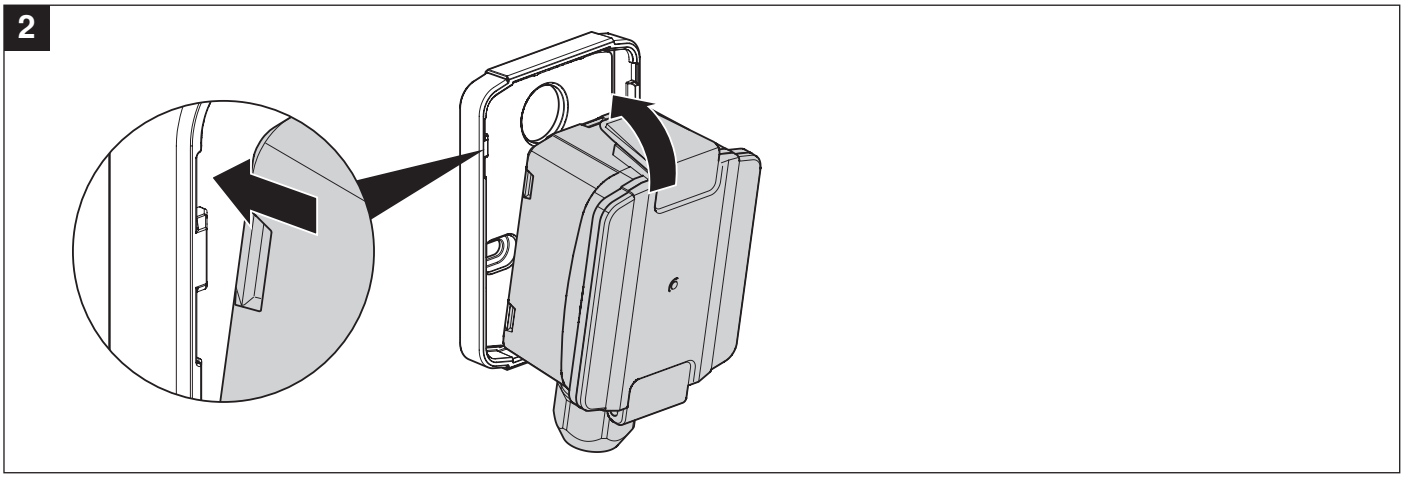

3

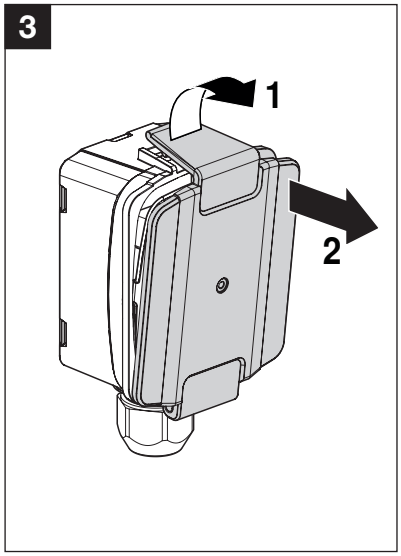

4

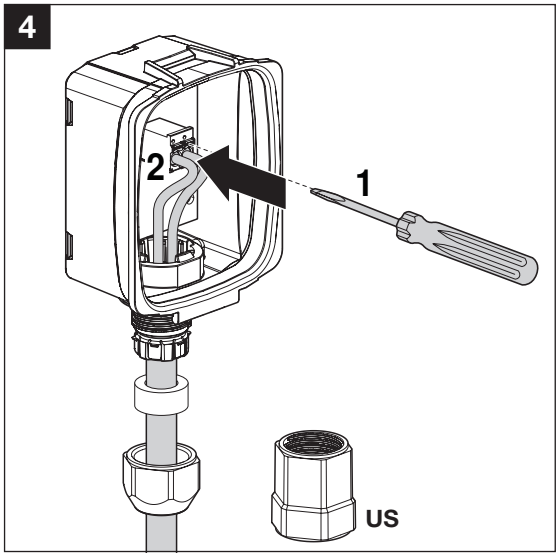

5

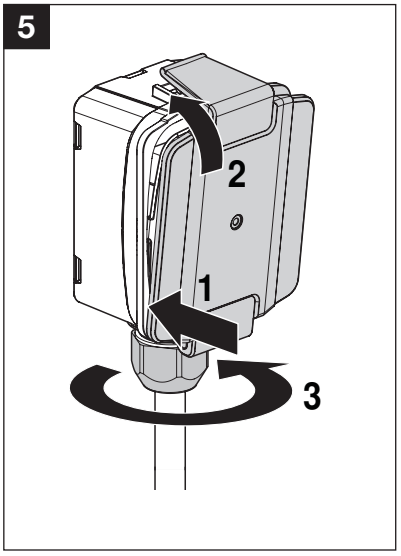

www.belimo.com/safety

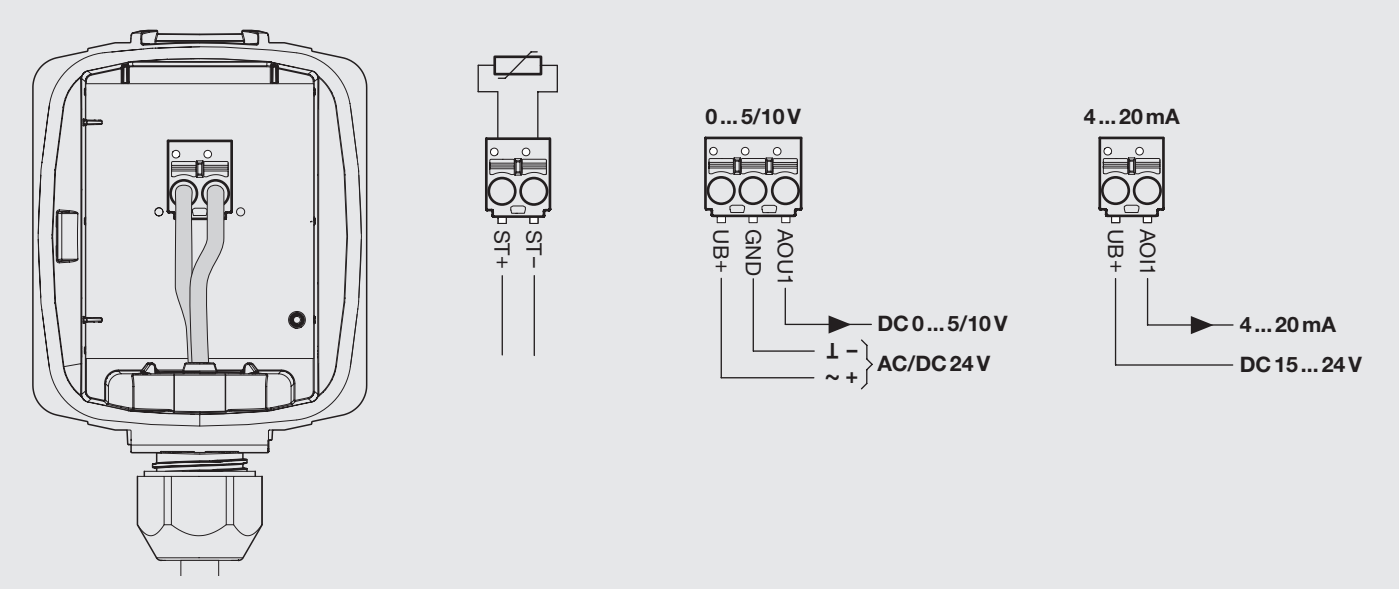
ST+
ST–
0 ... 5/10 V
UB+
GND
AOU1
DC 0 ... 5/10 V
⊥ –
~ +
AC/DC 24 V
4 ... 20 mA
UB+
AOI1
4 ... 20 mA
DC 15 ... 24 V